Time Delay Valve

Combination of adjustable orifice and fixed flow allows transmission of a pneumatic signal after a fixed time period.

Symbol

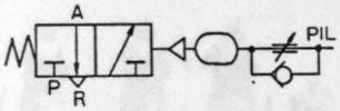

Model/Specifications

	VR2110-01
Supply pressure	0 to 1.0MPa
Signal pressure	0.25 to 0.8MPa
Time delay	0.5 to 60s
Repeatability	±10% F.S.
Operating and fluid temperature	−5 to 60°C (No freezing)
Effective area(Cv)	2.5mm² (0.14)
Port size (Nominal size)	Rc(PT) 1/8 (6A)
Weight	500g

Construction

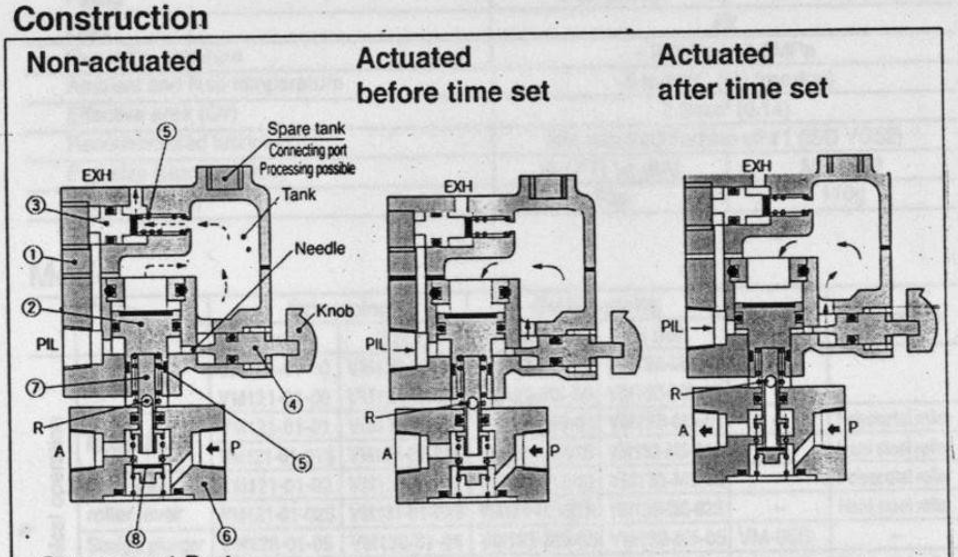

Component Parts

No.	Description	Material	Notes	No.	Description	Material	Notes
①	Body	Aluminum alloy	Metallic plated	⑤	Spring	Steel	
②	Piston	Brass, NBR	Rubber lined	⑥	Body	Zinc alloy	Metallic plated
③	Piston	Brass, NBR	Rubber lined	⑦	Plunger	Stainless steel	
④	Needle	Brass		⑧	Valve	Brass, NBR	Rubber lined

Signal Pressure vs. Time Delay

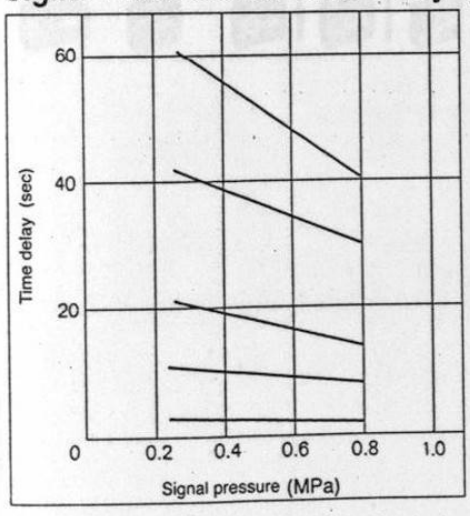

Piping Length vs. Release Time

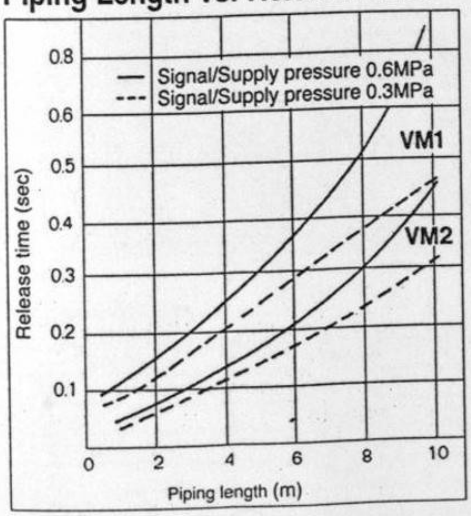

Dimensions

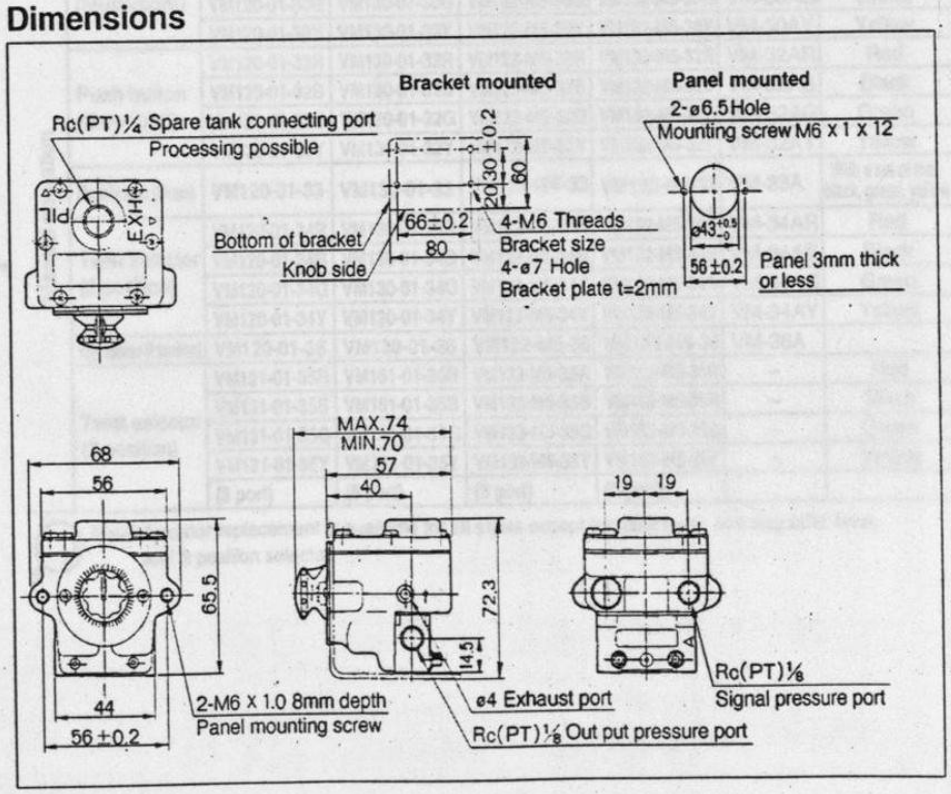

2/3 Port Mechanical Valve

Series VM100

Compact size.
Porting options: Side porting
Bottom porting
A variety of actuator styles.

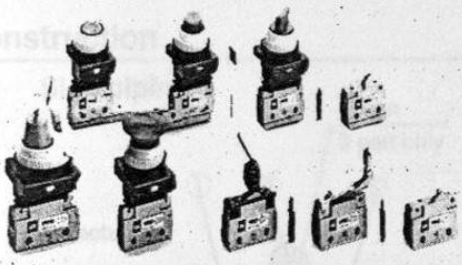

Specifications

Piping	Side piping	Bottom piping
Fluid	Air	
Operating pressure	–100kPa to 1.0MPa	
Ambient and fluid temperature	–5 to 60°C (No freezing)	
Effective area (Cv)	2.5mm² (0.14)	
Recommended lubricant	Not required/Turbine oil #1 (ISO VG32)	
Port size (Nominal size)	Rc(PT) 1/8 (6A)	M5 X 0.8
Weight (Basic)	95g	110g

Model

		Side piping		Bottom piping		Part No.	Application
		2 port	3 port	2 port	3 port		
Mechanical operation	Basic	VM120-01-00	VM130-01-00	VM122-M5-00	VM132-M5-00	–	
		VM121-01-00	VM131-01-00	VM123-M5-00	VM133-M5-00		
	Roller lever	VM121-01-01	VM130-01-01	VM123-M5-01	VM133-M5-01	–	Polyacetal roller
		VM121-01-01S	VM131-01-01S	VM123-M5-01S	VM133-M5-01S	–	Hard steel roller
	One way roller lever	VM121-01-02	VM131-01-02	VM123-M5-02	VM133-M5-02	–	Polyacetal roller
		VM121-01-02S	VM131-01-02S	VM123-M5-02S	VM133-M5-02S	–	Hard steel roller
	Straight plunger	VM120-01-05	VM130-01-05	VM122-M5-05	VM132-M5-05	VM-05B	–
	Roller plunger	VM120-01-06	VM130-01-06	VM122-M5-06	VM132-M5-06	VM-06B	Polyacetal roller
		VM120-01-06S	VM130-01-06S	VM122-M5-06S	VM132-M5-06S	VM-06BS	Hard steel roller
	Cross roller plunger	VM120-01-07	VM130-01-07	VM122-M5-07	VM132-M5-07	VM-07B	Polyacetal roller
		VM120-01-07S	VM130-01-07S	VM122-M5-07S	VM132-M5-07S	VM-07BS	Hard steel roller
Manual operation	Toggle lever	VM120-01-08	VM130-01-08	VM122-M5-08	VM132-M5-08	VM-08B	
	Push button (Mushroom)	VM120-01-30R	VM130-01-30R	VM122-M5-30R	VM132-M5-30R	VM-30AR	Red
		VM120-01-30B	VM130-01-30B	VM122-M5-30B	VM132-M5-30B	VM-30AB	Black
		VM120-01-30G	VM130-01-30G	VM122-M5-30G	VM132-M5-30G	VM-30AG	Green
		VM120-01-30Y	VM130-01-30Y	VM122-M5-30Y	VM132-M5-30Y	VM-30AY	Yellow
	Push button (Extended)	VM120-01-32R	VM130-01-32R	VM122-M5-32R	VM132-M5-32R	VM-32AR	Red
		VM120-01-32B	VM130-01-32B	VM122-M5-32B	VM132-M5-32B	VM-32AB	Black
		VM120-01-32G	VM130-01-32G	VM122-M5-32G	VM132-M5-32G	VM-32AG	Green
		VM120-01-32Y	VM130-01-32Y	VM122-M5-32Y	VM132-M5-32Y	VM-32AY	Yellow
	Push button (Flush)	VM120-01-33	VM130-01-33	VM122-M5-33	VM132-M5-33	VM-33A	With a set of red, black, green, yellow
	Twist selector (2 position)	VM120-01-34R	VM130-01-34R	VM122-M5-34R	VM132-M5-34R	VM-34AR	Red
		VM120-01-34B	VM130-01-34B	VM122-M5-34B	VM132-M5-34B	VM-34AB	Black
		VM120-01-34G	VM130-01-34G	VM122-M5-34G	VM132-M5-34G	VM-34AG	Green
		VM120-01-34Y	VM130-01-34Y	VM122-M5-34Y	VM132-M5-34Y	VM-34AY	Yellow
	Key selector (2 position)	VM120-01-36	VM130-01-36	VM122-M5-36	VM132-M5-36	VM-36A	
	Twist selector (3 position)	VM131-01-35R	VM151-01-35R	VM133-M5-35R	VM153-M5-35R	–	Red
		VM131-01-35B	VM151-01-35B	VM133-M5-35B	VM153-M5-35B	–	Black
		VM131-01-35G	VM151-01-35G	VM133-M5-35G	VM153-M5-35G	–	Green
		VM131-01-35Y	VM151-01-35Y	VM133-M5-35Y	VM153-M5-35Y	–	Yellow
		(3 port)	(5 port)	(3 port)	(5 port)		

Note) Actuator replacement is available for all styles except for roller lever, one way roller lever, and 3 position selector.

How To Order

VM1 3 1 - 01 - 01 S ☐

Number of ports

2	2 ports
3	3 ports

Piping direction and plunger length

0	Long	Side
1	Short	
2	Long	Bottom
3	Short	

Port size

01	Rc(PT)1/8
M5	M5 X 0.8 (Female thread)

Aactuator

00	Basic
01	Roller lever
02	One way roller lever
05	Straight plunger
06	Roller plunger
07	Cross roller plunger
08	Toggle lever
30	Push button (Mushroom)
32	Push button (Extended)
33	Push button (Flash)
34	Twist selector (2 position)
36	Key selector (2 position)
35	Twist selector (3 position)

Suffix of actuator

S	Hard steel roller	
R	Red	Color of push button
B	Black	
G	Green	
Y	Yellow	

Indicator

Z	W/ miniature indicator (Bottom piping only.)

Possible combination: ○, Impossible combination: ×

Actuator		Plunger length: Side Long 0	Side Short 1	Bottom Long 0	Bottom Short 1
Basic	00	○	○	○	○
Roller lever	01	×	○	×	○
One way roller lever	02	×	○	×	○
Straight plunger	05	○	×	○	×
Roller plunger	06	○	×	○	×
Cross roller plunger	07	○	×	○	×
Toggle lever	08	○	×	○	×
Push button (Mushroom)	30	○	×	○	×
Push button (Extended)	32	○	×	○	×
Push button (Flush)	33	○	×	○	×
Twist selector (2 position)	34	○	×	○	×
Key selector (2 position)	36	○	×	○	×
Twist selector (3 position)	35	×	○	×	○

Construction

Side piping

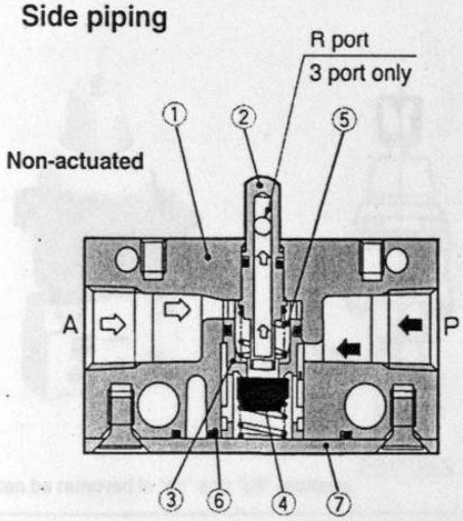

Bottom piping

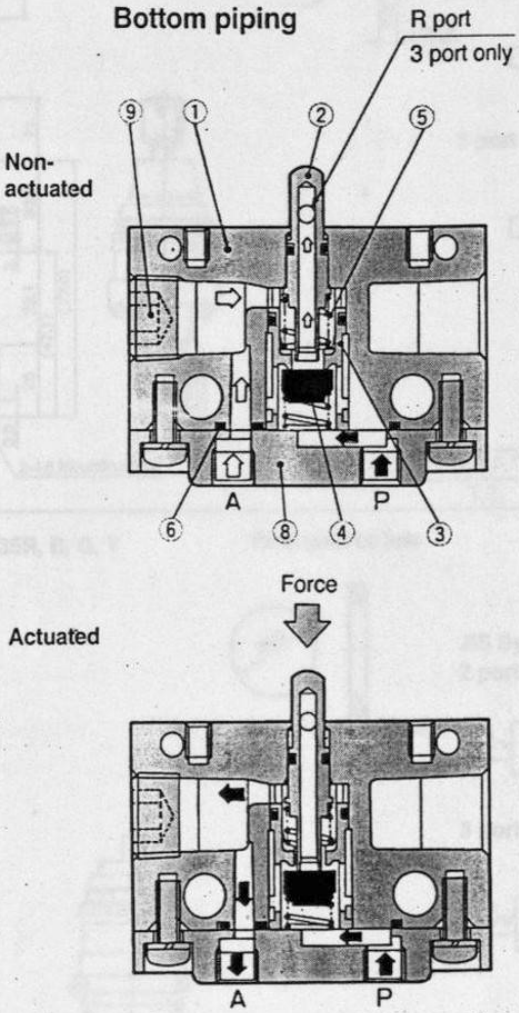

Component Parts

No.	Description	Material	Notes
①	Body	Zinc alloy	Metallic plated
②	Plunger	Polyacetal	
③	Valve seat	Polyacetal	
④	Valve	NBR	
⑤	Spring	Stainless steel	

No.	Description	Material	Notes
⑥	Gasket	NBR	
⑦	Cover	Rolled steel	
⑧	Subplate	Zinc alloy	Metallic plated
⑨	Hexagon socket head plug	Rolled steel	

Series VM100/Side Piping

Twist Selector (2 position)/VM120-01-34R, B, G, Y/VM130-01-34R, B, G, Y

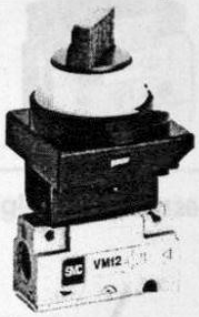

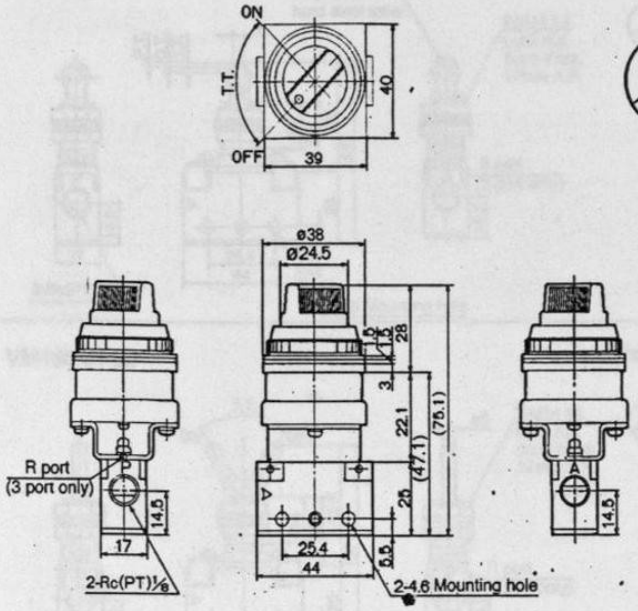

Panel mounted hole

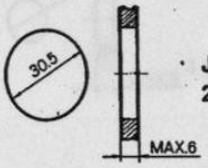

JIS Symbol
2 port

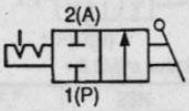

3 port

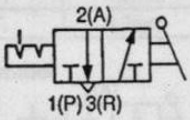

* 0.5MPa supply

F.O.F.*	15N
T.T.	90°

Key Selector (2 position)/VM120-01-36, VM130-01-36

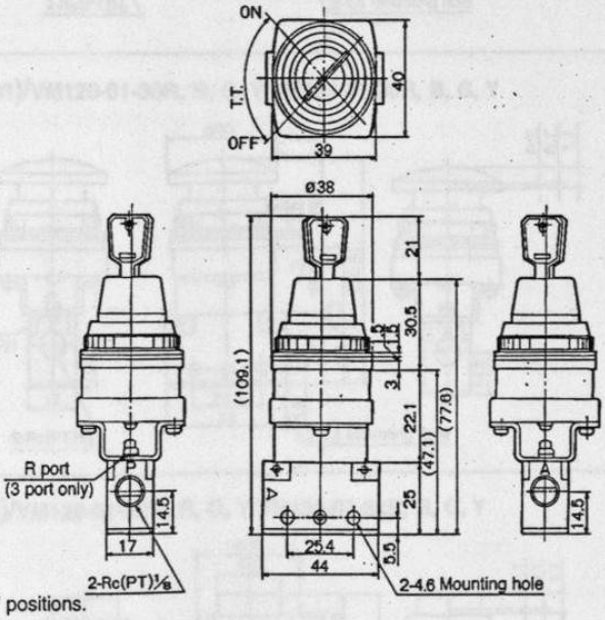

Panel mounted hole

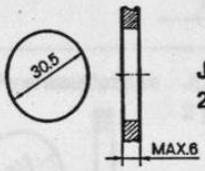

JIS Symbol
2 port

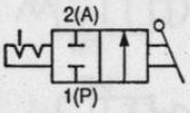

3 port

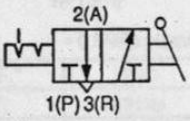

* 0.5MPa supply

F.O.F.*	15N
T.T.	90°

Key can be removed in "on" and "off" positions.

Twist Selector (3 position)/VM131-01-35R, B, G, Y/VM151-01-35R, B, G, Y

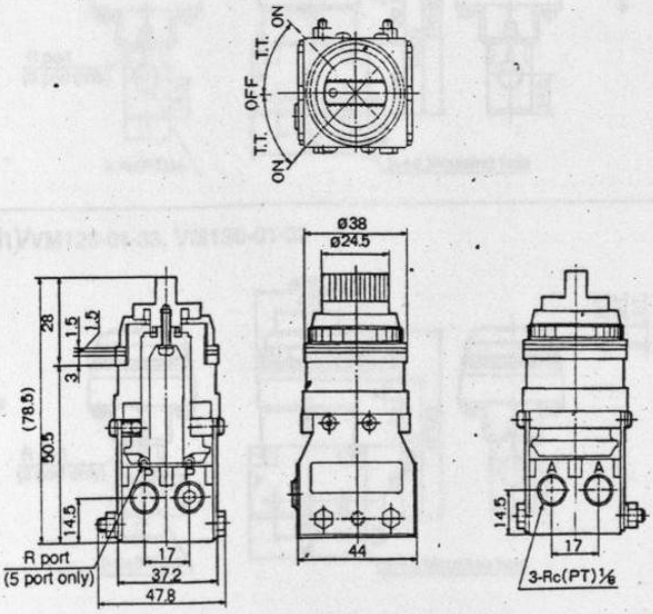

Panel mounted hole

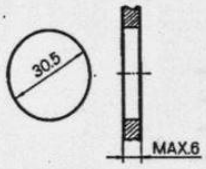

JIS Symbol
2 port

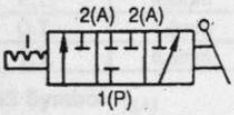

3 port

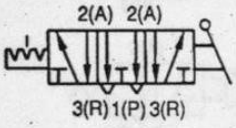

* 0.5MPa supply

F.O.F.*	15N
T.T.	45°

Series VM100/Side Piping

Cross Roller Plunger/VM120-01-07, VM130-01-07
VM120-01-07S, VM130-01-07S

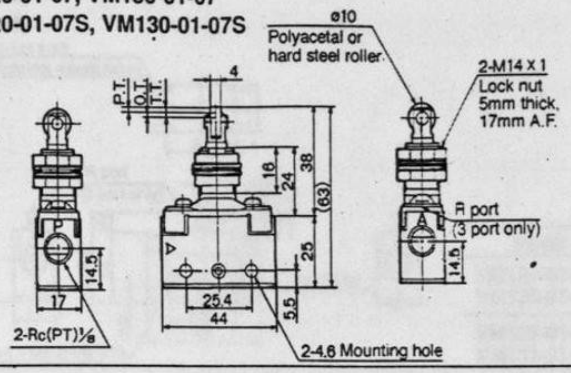

Panel mounted hole

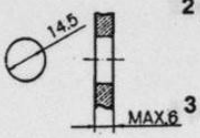

JIS Symbol

2 port

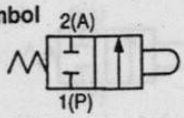

3 port

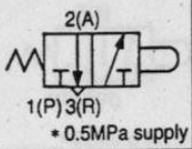

* 0.5MPa supply

F.O.F.*	23N
P.T.	2mm
O.T.	1.5mm
T.T.	3.5mm

Toggle Lever/VM120-01-08, VM130-01-08

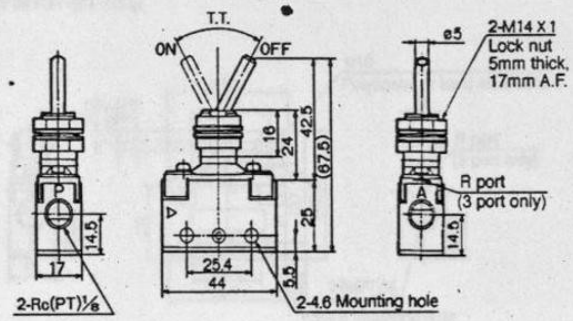

Panel mounted hole

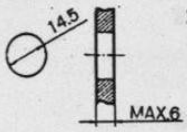

JIS Symbol

2 port

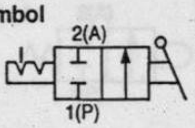

3 port

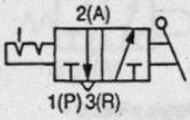

* 0.5MPa supply

F.O.F.*	10N
T.T.	60°

Push Button (Mushroom)/VM120-01-30R, B, G, Y/VM130-01-30R, B, G, Y

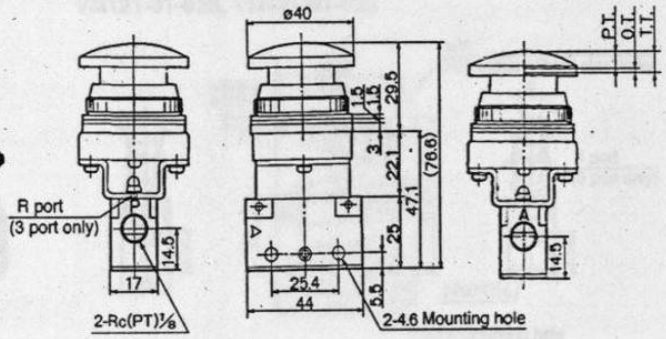

Panel mounted hole

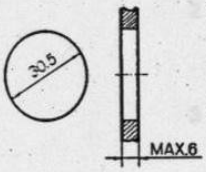

JIS Symbol

2 port

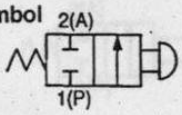

3 port

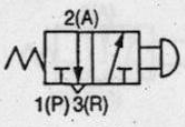

* 0.5MPa supply

F.O.F.*	21N
P.T.	4.9mm
O.T.	1.6mm
T.T.	6.5mm

Push Button (Extended)/VM120-01-32R, B, G, Y/VM130-01-32R, B, G, Y

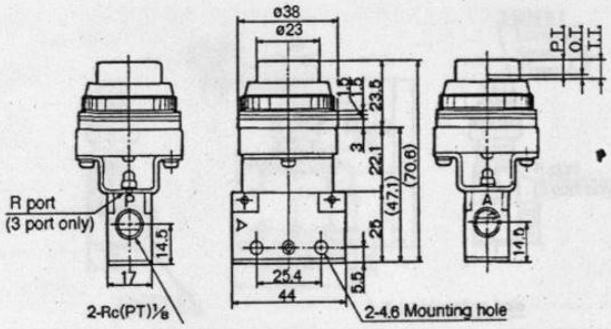

Panel mounted hole

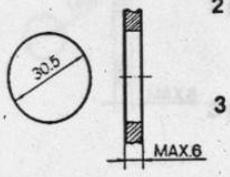

JIS Symbol

2 port

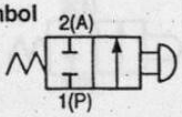

3 port

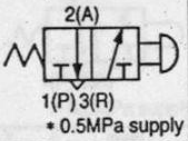

* 0.5MPa supply

F.O.F.*	21N
P.T.	4.9mm
O.T.	1.6mm
T.T.	6.5mm

Push Button (Flush)/VM120-01-33, VM130-01-33

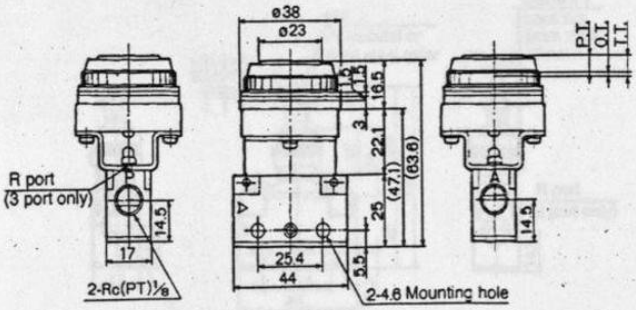

Panel mounted hole

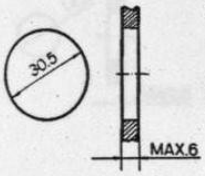

JIS Symbol

2 port

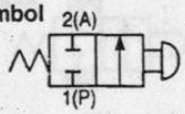

3 port

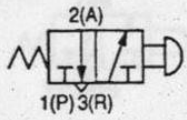

* 0.5MPa supply

F.O.F.*	21N
P.T.	4.9mm
O.T.	1.6mm
T.T.	6.5mm

Series VM100/Side Piping

Basic/VM120-01-00, VM130-01-00
VM121-01-00, VM131-01-00

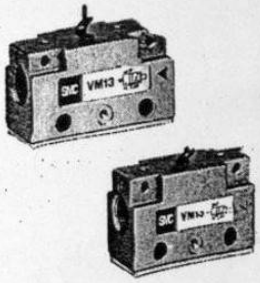

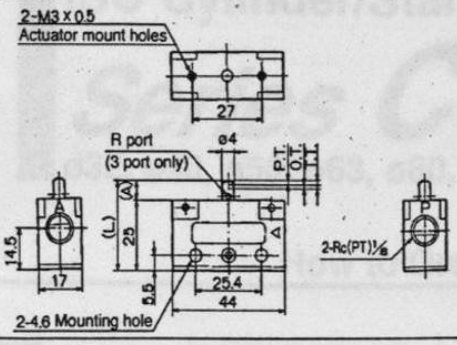

Model	L	A
VM120-01-00 VM130-01-00	32.5	7.5
VM121-01-00 VM131-01-00	28.5	3.5

JIS Symbol
2 port

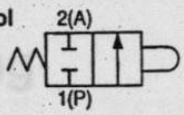

3 port

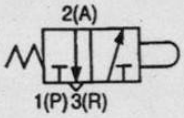

* 0.5MPa supply

F.O.F.*	20N
P.T.	1.5mm
O.T.	1.5mm
T.T.	3mm

Roller Lever/VM121-01-01, VM131-01-01
VM121-01-01S, VM131-01-01S

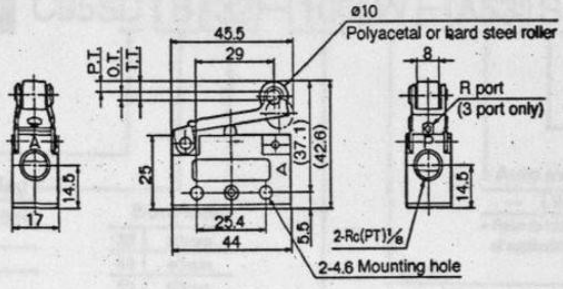

JIS Symbol
2 port

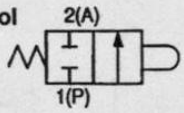

3 port

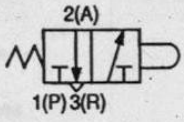

* 0.5MPa supply

F.O.F.*	10N
P.T.	3.2mm
O.T.	2.3mm
T.T.	5.5mm

One Way Roller Lever/VM121-01-02, VM131-01-02
VM121-01-02S, VM131-01-02S

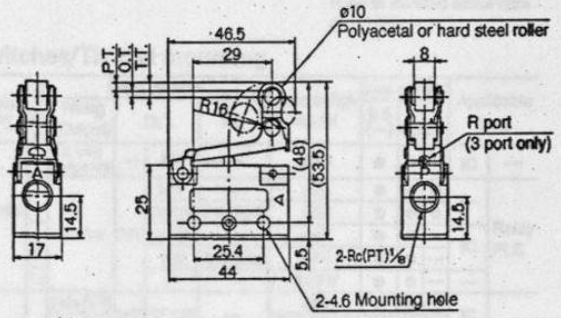

JIS Symbol
2 port

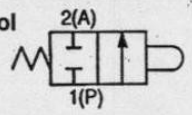

3 port

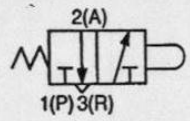

* 0.5MPa supply

F.O.F.*	10N
P.T.	3.2mm
O.T.	2.3mm
T.T.	5.5mm

Straight Plunger/VM120-01-05, VM130-01-05

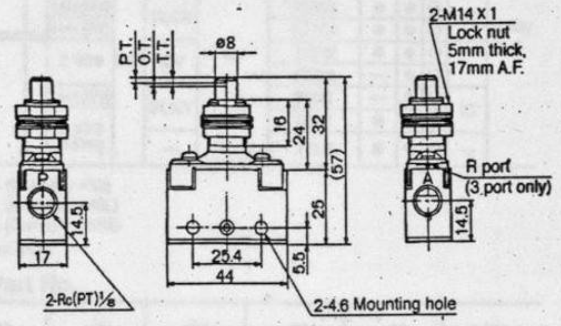

Panel mounted hole

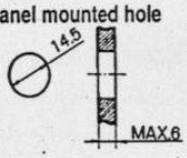

JIS Symbol
2 port

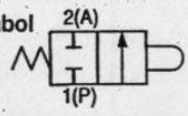

3 port

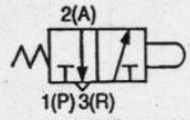

* 0.5MPa supply

F.O.F.*	23N
P.T.	2mm
O.T.	1.5mm
T.T.	3.5mm

Roller Plunger/VM120-01-06, VM130-01-06
VM120-01-06S, VM130-01-06S

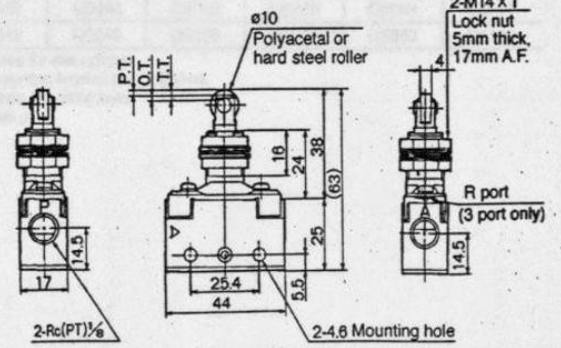

Panel mounted hole

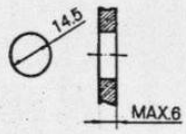

JIS Symbol
2 port

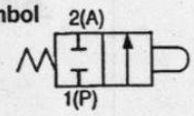

3 port

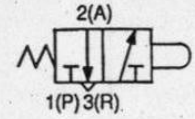

* 0.5MPa supply

F.O.F.*	23N
P.T.	2mm
O.T.	1.5mm
T.T.	3.5mm

ISO Cylinder/Standard: Double Acting

Series C95

ø32, ø40, ø50, ø63, ø80, ø100

How to Order

Standard C95S B 32 — 100 W — XB6

With auto switch C95SD B 32 — 100 W — A53 S

Made to order

XB6	Heat resistant (Max. 150°C)

• Not applicable to non-rotating rod (C95K) and models with built-in magnets.

Number of auto switches

—	2
S	1
3	3
n	n

Auto switch

—	Without auto switch

• Refer to table below for selection of applicable auto switch.

Built-in magnet

Mounting

B	Basic/Without bracket
L	Axial foot
F	Front flange
G	Rear flange
C	Single rear clevis
D	Double rear clevis
T	Center trunnion

Bore size

32	32mm
40	40mm
50	50mm
63	63mm
80	80mm
100	100mm

Rod

—	Single rod
W	Double rod
R	Stainless steel rod

Stroke (mm)

Refer to standard stroke table on p.1.8-3.

Applicable Auto Switches/Tie rod mounting

Style	Special function	Electrical entry	Indicator	Load voltage: Wiring (Output)	DC		AC	Auto switch model	Lead wire (m)* 0.5 (—)	3 (L)	5 (Z)	Applicable load	
Reed switch	—	Grommet	Yes	3 wire (Equiv. to NPN)	—	5V	—	A56	●	●	—	IC	—
				2 wire	24V	12V	—	A53	●	●	●	—	Relay PLC
						5V,12V	100V,200V	A54	●	●	●		
			No			5V,12V	—	A67	●	●	—	IC	
						12V	200V or less	A64	●	●	—		
	Diagnosis indication (2 color)		Yes			—	—	A59W	●	●	—	—	
Solid state switch	—	Grommet	Yes	3 wire (NPN)	24V	5V,12V	—	F59	●	●	O	IC	Relay PLC
				3 wire (PNP)				F5P	●	●	O		
				2 wire	—	—	100V,200V	J51	●	●	O	—	
					24V	12V	—	J59	●	●	O		
	Diagnosis indication (2 color)			3 wire (NPN)		5V,12V		F59W	●	●	O	IC	
				3 wire (PNP)				F5PW	●	●	O		
				2 wire		12V		J59W	●	●	O	—	
	Water resistant (2 color)							F5BA	—	●	O		
	With timer			3 wire (NPN)		5V,12V		F5NT	—	●	O	IC	
	Diagnosis output (2 color)			4 wire (NPN)				F59F	●	●	O		
	Latch diagnosis output (2 color)					—		F5LF	●	●	O	—	

• Lead wire length 0.5m------ — (Example: A53)
3m-------- L (Example: A53L)
5m-------- Z (Example: A53Z)

O: Manufactured upon receipt of order.

Mounting Bracket Part No.

Bore size	ø32	ø40	ø50	ø63	ø80	ø100
Foot(1)	L5032	L5040	L5050	L5063	L5080	L5100
Flange	F5032	F5040	F5050	F5063	F5080	F5100
Single rear clevis	C5032	C5040	C5050	C5063	C5080	C5100
Double rear clevis	D5032	D5040	D5050	D5063	D5080	D5100

Note 1) Two foot brackets required for one cylinder.
Note 2) Accessories for each mounting bracket are as follows.
Foot, Flange, Single clevis: Mounting bolts
Double rear clevis: Clevis pin

Auto Switch Mounting Bracket Part No.

Bore size	ø32, ø40	ø50, ø63	ø80, ø100
Mounting bracket	BT-03	BT-05	BT-06

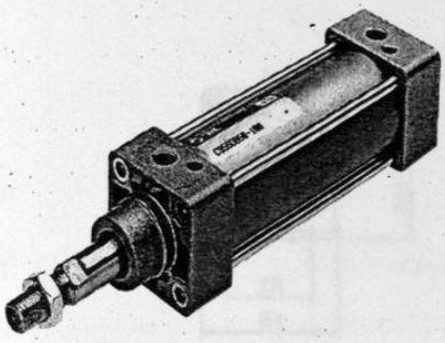

JIS Symbol
Double acting

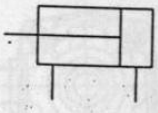

Minimum Strokes for Auto Switch Mounting

Refer to p.1.8-12 for "Minimum Strokes for Auto Switch Mounting".

Specifications

Bore size	ø32	ø40	ø50	ø63	ø80	ø100
Action	Double acting					
Fluid	Air					
Proof pressure	1.5MPa					
Max. operating pressure	1.0MPa					
Min. operating pressure	0.05MPa					
Ambient and fluid temperature	Without magnet –10 to 70°C (No freezing)					
	With magnet –10 to 60°C (No freezing)					
Lubrication	Not required (Non-lube)					
Operating piston speed	50 to 1000mm/s					
Allowable stroke tolerance	to 250: $^{+1.0}_{0}$, 251 to 1000: $^{+1.4}_{0}$, 1001 to 1500: $^{+1.8}_{0}$					
Cushion	Both ends (Air cushion) (1)					
Thread tolerance	JIS class 2					
Port size	G1/8	G1/4	G1/4	G3/8	G3/8	G1/2
Mounting	Basic, axial foot, front flange, rear flange, single rear clevis, double rear clevis, center trunnion					

Note 1) When requesting a cylinder without air cushion, cylinder utilizes rubber bumpers which increase cylinder's overall length.

Standard Stroke

Bore size (mm)	Standard stroke (mm)	Max. * stroke
32	25, 50, 80, 100, 125, 160, 200, 250, 320, 400, 500	700
40	25, 50, 80, 100, 125, 160, 200, 250, 320, 400, 500	800
50	25, 50, 80, 100, 125, 160, 200, 250, 320, 400, 500, 600	1200
63	25, 50, 80, 100, 125, 160, 200, 250, 320, 400, 500, 600	1200
80	25, 50, 80, 100, 125, 160, 200, 250, 320, 400, 500, 600	1400
100	25, 50, 80, 100, 125, 160, 200, 250, 320, 400, 500, 600	1500

Intermediate strokes are available.
* Consult SMC for longer strokes.

Applicable Auto Switches

Style	Auto switch model	Electrical entry (function)
Reed switch	D-A5□/A6□	Grommet
	D-A59W	Grommet (2 color indication)
Solid state switch	D-F5□/J5□	Grommet
	D-F5□W/J59W□	Grommet (2 color indication)
	D-F5BA	Grommet (2 color, Water resistant)
	D-F5□F	Grommet (2 color, diagnosis output)
	D-F5NT	Grommet (Timer)

Accessories

Mounting		Basic	Foot	Front flange	Rear flange	Single rear clevis	Double rear clevis	Center trunnion
Standard	Rod end nut	●	●	●	●	●	●	●
	Clevis pin	—	—	—	—	—	●	—
Option	Single rod clevis	●	●	●	●	●	●	●
	Double rod clevis (with pin)	●	●	●	●	●	●	●
	Rod boot	●	●	●	●	●	●	●

With Mounting Bracket

Foot L

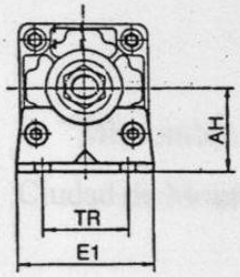

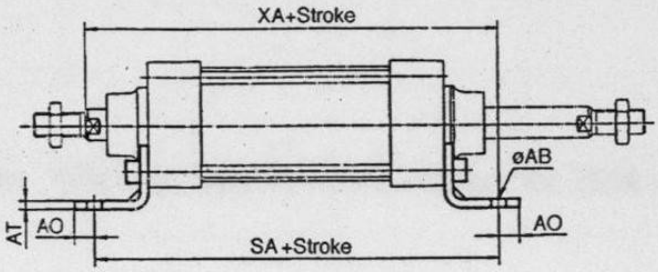

Centre trunnion T

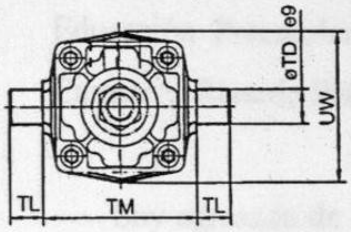

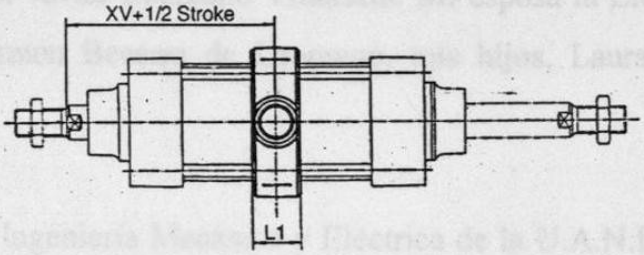

Flange F

Mounting at the back

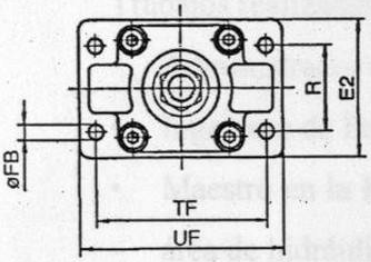

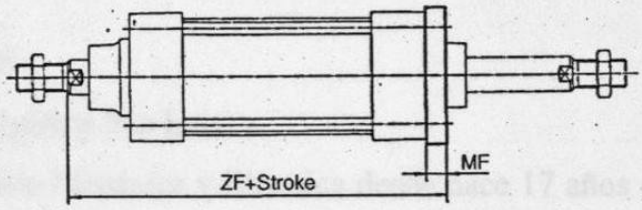

Mounting at the front

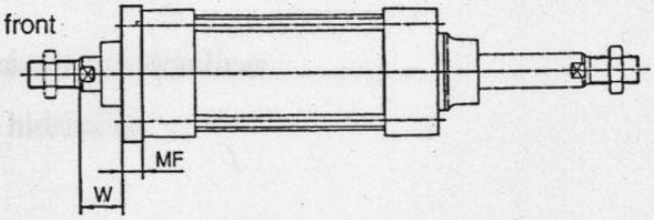

Rear single clevis C

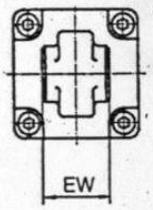

Rear double clevis D

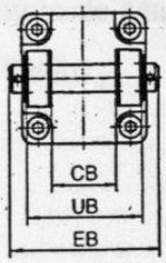

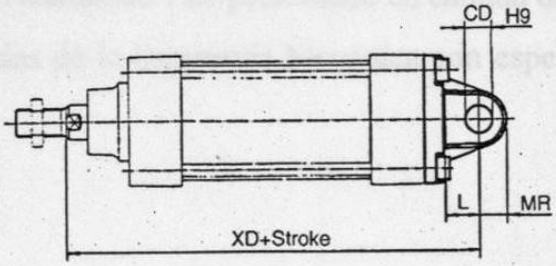

Bore (mm)	E1	R	W	MF	ZF	øFB	CD	EB	L	XD	UB	CB	EW	MR	TR	AO	AT	XA	SA	AH	øAB	L1	XV	TL	øTD	TM	UW	TF	UF	E2
32	48	32	16	10	130	7	10	65	12	142	45	26	26	9.5	32	10	4.5	144	142	32	7	17	73	12	12	50	49	64	79	50
40	55	36	20	10	145	9	12	75	15	160	52	28	28	12	36	11	4.5	163	161	36	10	22	82.5	16	16	63	58	72	90	55
50	68	45	25	12	155	9	12	80	15	170	60	32	32	12	45	12	5.5	175	170	45	10	22	90	16	16	75	71	90	110	70
63	80	50	25	12	170	9	16	90	20	190	70	40	40	16	50	12	5.5	190	185	50	10	28	97.5	20	20	90	87	100	120	80
80	100	63	30	16	190	12	16	110	20	210	90	50	50	16	63	14	6.5	215	210	63	12	34	110	20	20	110	110	126	153	100
100	120	75	35	16	205	14	20	140	25	230	110	60	60	20	75	16	6.5	230	220	71	14.5	40	120	25	25	132	136	150	178	120

RESUMEN AUTOBIOGRÁFICO

Mi nombre es Ricardo Laureano Villarreal, nací el 12 de Febrero de 1958 en la Ciudad de Monterrey, N.L.

Mis padres son, el Sr. Ricardo Laureano Martínez (✝) y la Sra. Mercedes Villarreal de Laureano; mi hermano, el Profesor Javier Laureano Villarreal. Mi esposa la Lic. en Educación Preescolar Laura del Carmen Becerra de Laureano, mis hijos, Laura del Carmen y Ricardo Pedro.

Soy egresado de la Facultad de Ingeniería Mecánica y Eléctrica de la U.A.N.L. de la carrera de Ingeniero Mecánico Administrador, en el año de 1981.

Trabajos realizados:

- Administrador de taller de mi padre;
- Ingeniero de Proyectos en Cerrey (planta San Luis)
- Maestro en la Facultad de Ingeniería Mecánica y Eléctrica desde hace 17 años en el área de hidráulica
- Jefe de academia en la clase de máquinas hidráulicas.
- Jefe de departamento de potencia hidráulica.

Este trabajo que lleva como título "Investigación, Análisis y Desarrollo de un Manual para el Diseño en un Sistema Neumático". Es presentado en calidad de Tesis con opción al Título de Maestro en ciencias de la Ingeniería Mecánica con especialidad en Térmica y Fluidos.

TIPO DE ADQUISICION
DONATIVO